Boosting efficiency.

ZEISS EXTARO 300

ZEISS

Seeing beyond

zeiss.com/ent/extaro

Simplifying visibility

Experience breakthrough visualization capabilities combined with an optimized workflow when using EXTARO® 300 from ZEISS for tympanoplasty, myringotomy, stapedectomy, mastoidectomy, and transoral laser surgery.

Thanks to the ZEISS EXTARO 300, you can recognize precise anatomical structures and identify fine details, allowing you to make better decisions. The intuitive functionalities minimize interruptions and maximize your focus on the surgery. Innovative data management solutions enable you to capture photos and record videos of every treatment, organized according to your surgical needs.

The ZEISS EXTARO 300 allows you to save valuable time before, during and after each surgical intervention – and focus on what matters most: your patients.

Augmented Visualization

Low-color contrast often makes it difficult to recognize critical anatomical structures. The new **MultiSpectral Mode** of ZEISS EXTARO 300 enhances this contrast, e.g. to better distinguish between vasculature and tissue.

Sometimes light reflections complicate the surgical procedure. The new **NoGlare Mode** suppresses these obtrusive reflections, allowing for a faster and more detailed distinction of anatomical details and artificial implants.

ZEISS EXTARO 300 enables a more accurate assessment of the surgical situation for better decision-making.

Visualization enhanced.

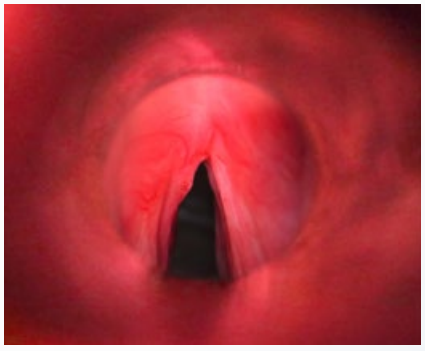

Vocal cords under white light

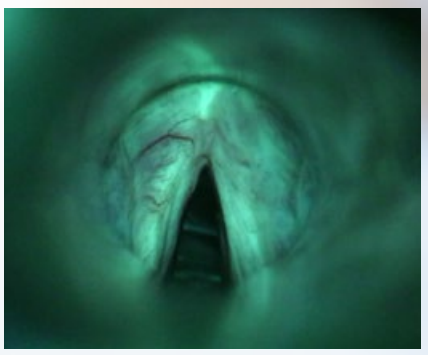

*Vocal cords under **MultiSpectral Mode***

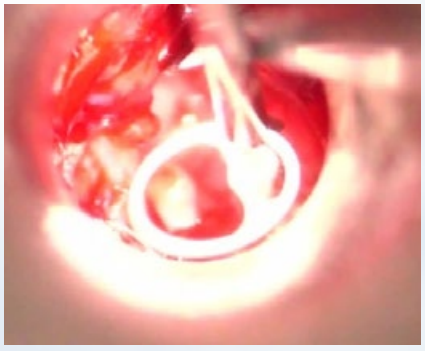

Stapedectomy under white light

*Stapedectomy under **NoGlare Mode***

Application image courtesy of
Prof. Marcel Kraft, Hirslanden Private Hospital Group, Basel, Switzerland (MultiSpectral Mode) and
Prof. Mark Praetorius, University Clinic of Heidelberg, Germany (NoGlare Mode)

EXTARO
300
12.5x

Single-Handed Operation

Any adjustment or repositioning of the microscope can greatly disturb focus and cost you valuable time.

With the **Mode Control** button, ZEISS EXTARO 300 allows you to activate all visualization modes and camera functionalities without taking your eyes off the surgical field. With its innovative balancing and movement system, frequent repositioning will not be a burden on your procedure. And if that's not enough, the new Varioskop® 230 can be operated with just one finger to maximize ergonomics. Effortlessly set the field of view and focus over a wide working range of 200 to 430 mm.

Thanks to ZEISS EXTARO 300, you can perform procedures with maximum focus and efficiency.

Best in class.

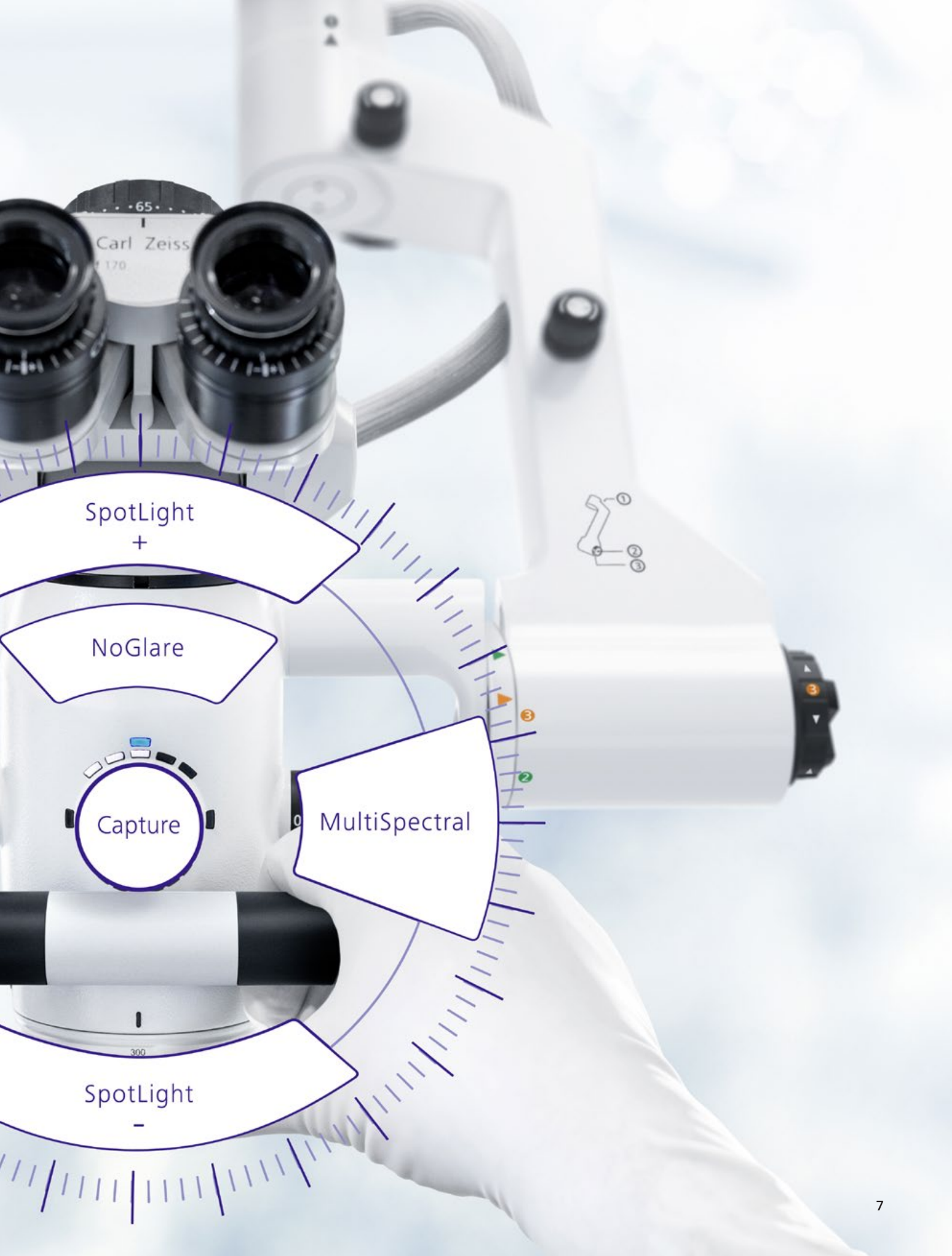
SpotLight
+
NoGlare
Capture
MultiSpectral
SpotLight
–

Digital Data Management

ZEISS offers various iOS- and web based apps that support an easy and efficient pathway to data management and facilitate professional peer collaboration.

Web-based apps

Efficiently manage your data and peer collaboration.
ZEISS Surgical Cloud directly synchronizes recorded images and videos including patient and treatment information with your ZEISS EXTARO 300 and allows you to manage them easily. It supports you to enhance your professional collaboration and extend your network by remote sharing of large files and knowledge with your peers.

Educate and present in real time to a bigger audience.
ZEISS Livestream allows you to schedule a live surgery or treatment and send out invitation links to participants in advance. On the day of the live event, your participants can watch the procedure via the secure web link in just a few clicks.

iOS-based apps

Connect iPad to ZEISS EXTARO 300
ZEISS Connect manages your treatment data efficiently with dedicated functionalities to integrate the ZEISS EXTARO 300 into your existing office IT infrastructure. It allows you to easily visualize, organize and archive photos and videos from your surgical cases.

Stream in real time on an iPhone
With **ZEISS Observe**, students and guests can easily follow the treatment without advanced equipment. For a 3D immersive VR experience any VR headset can be used.

Procedure Architect
NETWORK
New Network
Search
Tympanoplasty
PREDEFINED PROCEDURES
Tympanoplasty
Cataract Surgery
Caries Excavation
CUSTOM PROCEDURES
Add Procedure
1. Opening
Opening of the ear
2. Inspection & Survey
Inspection of the situs and determination of correct size with test implants
3. Insertion
Insertion of implant (prosthesis)
4. Closing
Closing of the ear

ZEISS EXTARO 300

Latest innovations at a glance

In 1953, the first ZEISS surgical microscope was developed specially for ENT surgeons. Since then, ZEISS has redefined and set high industry standards, and our latest innovation, ZEISS EXTARO 300, is continuing this legacy.

Innovative visualization modes: MultiSpectral Mode increases tissue contrast, while NoGlare Mode suppresses light reflections.
Visualization enhanced.

Balancing system: Three simple steps for a perfectly balanced system.
Easy as 1-2-3.

LED: Integrated maintenance-free LED light source.
Built to last.

Control interface: Single-Handed Operation for the activation of all visualization and recording modes.
Mode Control activated.

Laser package: Easy adaptation of surgical laser possible, including innovative microscope focus lock and external focus slider.
Compatibility achieved.

ZEISS Varioskop® 230: Focus over a working distance of 200 to 430 mm with just one finger.
Always in focus.

EXTARO
ZEISS
Zeiss
60
1
0.6
3
2

Customer Care from ZEISS

Optimizing your operation

To efficiently deliver good surgical outcomes for your patients, you rely on the availability of your medical equipment when you need it.

For maximum system uptime and convenience, you might want to consider a service agreement for your ZEISS EXTARO 300. Depending on the service package you choose, OPTIME service agreements from ZEISS cover preventive maintenance, corrective maintenance and spare parts.

Different financing options are also available. These ZEISS Financial Solutions allow you to acquire ZEISS technology developed specially for your individual needs.

No matter which ZEISS services you choose, we are committed to helping you optimize your business in every respect.

Technical Data

EXTARO® 300 from ZEISS

			Packages: Pure efficiency	Augmented Visualization	Premium
Magnification	5-step magnification changer		●	●	●
Focus	Varioskop 230, working distance adjustable from 200 to 430 mm		●	●	●
Illumination	TriLED provides natural colored light at high intensities		●	–	–
	TriLED with LightBoost providing Xenon-like intensities		□	●	●
Single-Handed Operation	Unique user interface and intuitive balancing process allow smooth and effortless single handed operation of the microscope		●	●	●
Tube	Straight binocular tube		○	○	○
	180° tiltable tube		○	○	○
	Foldable tube f170/f260		○	○	○
Eyepieces	10× wide-field eyepieces		○	○	○
	12.5× wide-field eyepieces		○	○	○
Augmented Visualization	Augmented Visualization Kit includes GreenColor Mode and enables: MultiSpectral Mode NoGlare Mode		–	●	●
	NoGlare Mode		–	□	□
	MultiSpectral Mode		–	□	□
Communication	Essential: Integrated HD camera with recording on USB; HDMI output		●	□	–
	Complete: Integrated HD camera with recording on USB or wireless recording to the ZEISS Connect App; network integration available for archiving purposes; HDMI output		○	□	●
	Web-based apps	ZEISS Surgical Cloud – synchronize recorded images and videos	–	–	□
		ZEISS Livestream – educate and present remotely	–	–	□
	iOS-based apps	ZEISS Connect App – manage your treatment data efficiently	○	–	●
		ZEISS Observe – stream in real time on an iPhone	○	–	●
	DICOM		○	□	○
	Adapter for digital cameras (Full-frame or APS-C)		□	○	□
Documentation	Essential: integrated HD-video (1080p) recording on USB-attached storage, HDMI output, trigger from microscope or with remote control		□	□	–
	Digital Data Management: integrated HD-video (1080p), HDMI output, ZEISS Connect iPad App for camera control including smart recording and media data management according to customer-defined workflows		–	–	●
	ZEISS Connect DICOM Interface		–	–	□
	iPad docking station		–	–	□
Co-observation	Stereo co-observation package with straight tube, incl. beamsplitter and TriLED with LightBoost providing Xenon-like intensities	10× eyepieces	□	□	□
		12,5× eyepieces	□	□	□
Laser adaption	Laser package contains: - adapter for laser micromanipulator - microscope focus lock - external focus slider that allows to jointly move microscope and laser focus point		□	□	□
Asepsis	Asepsis starter kit consists of drape adapter ring for VisionGuard® splash guard and packs of resterilizable covers		□	□	□
	Drape starter kit		□	□	□

● Always included ○ Configurable □ Optional

Suspension system options*

Ceiling mount

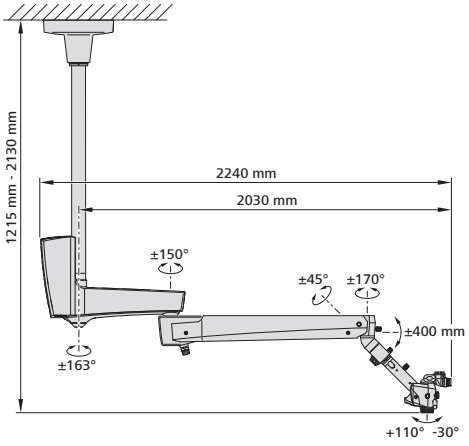

Wall mount

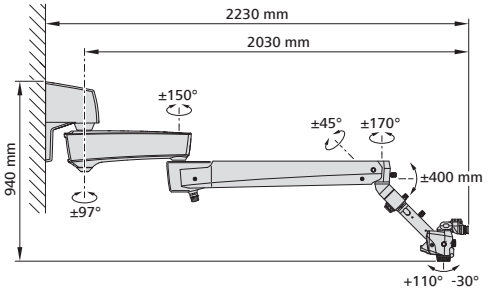

Floor stand

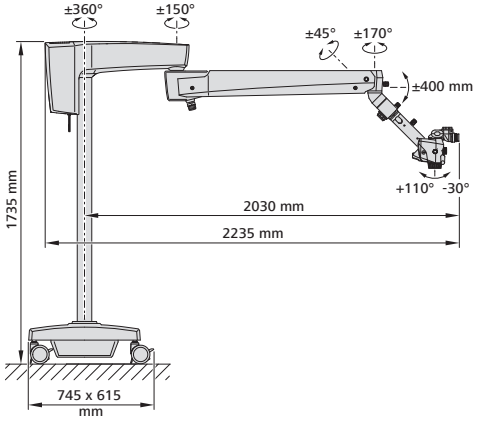

*All data is measured internally with possible deviation due to different measuring methods or tools.

en-INT_30_010_0400VI CZ-II/2024 International edition: Only for sale in selected countries.
The contents of the brochure may differ from the current status of approval of the product or service offering in your country. ZEISS Surgical Cloud and ZEISS Livestream are intended for educational purposes only and are not intended to diagnose or treat any diseases. Please contact our regional representatives for more information. Subject to changes in design and scope of delivery and due to ongoing technical development. EXTARO, Varioskop and VisionGuard are either trademarks or registered trademarks of Carl Zeiss Meditec AG or other companies of the ZEISS Group in Germany and / or other countries. iPad® and iPhone® are trademarks of Apple Inc., registered in the U.S. and other countries.
© Carl Zeiss Meditec AG, 2024. All rights reserved.

CE MD

Carl Zeiss Suzhou Co., Ltd.
Modern Industrial Square 3-B,
No.333 Xingpu Road
Suzhou Industrial Park, Suzhou
China 215126

EC REP **Carl Zeiss Meditec AG**
Goeschwitzer Strasse 51–52
07745 Jena, Germany
www.zeiss.com/med/contacts

Legal Manufacturer of ZEISS Connect
Carl Zeiss Meditec AG
Goeschwitzer Strasse 51–52
07745 Jena, Germany

Physical Manufacturer of ZEISS Connect
Carl Zeiss India (Bangalore) Pvt. Ltd.
CARIn Division
Plot No.3, Jigani Link Road
Bommasandra Industrial Area
Bangalore 560 099
India